17205

21213

4 Hours / 100 Marks **Seat No.** 4 5 9 6 2 8 - +

Instructions : (1) All Questions are *compulsory*.
(2) Illustrate your answers with neat sketches wherever necessary.
(3) Figures to the right indicate full marks.
(4) Assume suitable data, if necessary.
(5) Use of Non-Programmable Electronic Pocket Calculator is permissible.
(6) Mobile Phone, Pager and any other Electronic Communication devices are not permissible in Examination Hall.
(7) Use only H/2H grade pencil.

Marks

1. (a) A pictorial view of an object is shown in Fig. 1. Draw following views by using 1st Angle method of projection :
(1) Sectional F.V; section along A – A. 5
(2) Left hand side view. 5

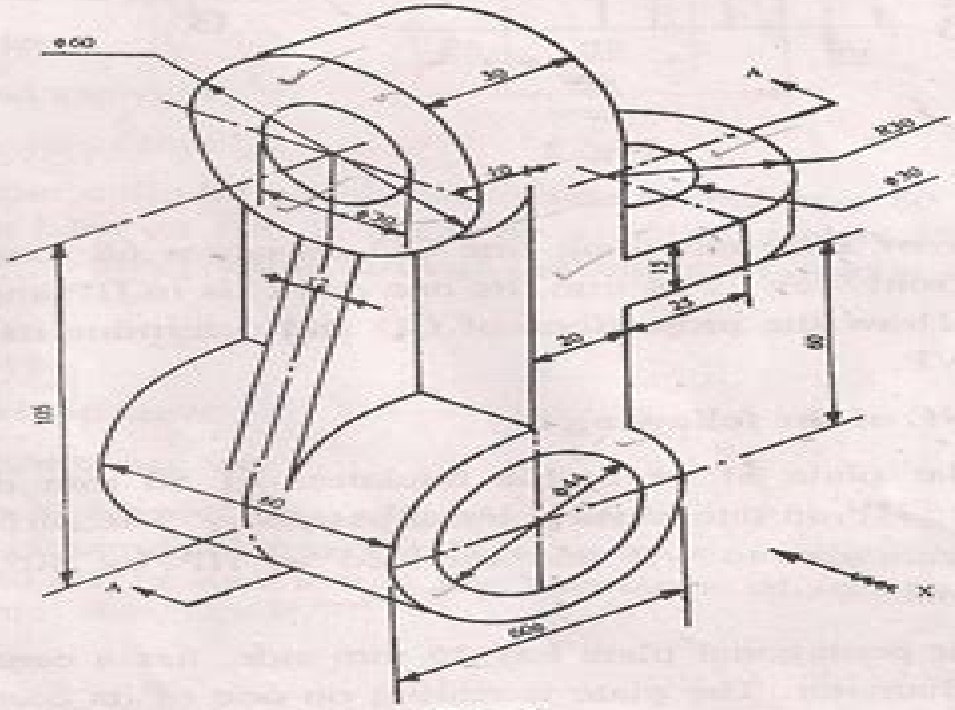

Fig. 1

Diploma In Mechanical Engineering Question Papers 2013

JA Banks

Diploma In Mechanical Engineering Question Papers 2013:

Early Warning Systems and Targeted Interventions for Student Success in Online Courses Glick, Danny,Cohen, Anat,Chang, Chi,2020-06-26 Online learning has increasingly been viewed as a possible way to remove barriers associated with traditional face to face teaching such as overcrowded classrooms and shortage of certified teachers While online learning has been recognized as a possible approach to deliver more desirable learning outcomes close to half of online students drop out as a result of student related course related and out of school related factors e g poor self regulation ineffective teacher student student student and platform student interactions low household income Many educators have expressed concern over students who unexpectedly begin to struggle and appear to fall off track without apparent reason A well implemented early warning system therefore can help educators identify students at risk of dropping out and assign and monitor interventions to keep them on track for graduation Despite the popularity of early warning systems research on their design and implementation is sparse Early Warning Systems and Targeted Interventions for Student Success in Online Courses is a cutting edge research publication that examines current theoretical frameworks research projects and empirical studies related to the design implementation and evaluation of early warning systems and targeted interventions and discusses their implications for policy and practice Moreover this book will review common challenges of early warning systems and dashboard design and will explore design principles and data visualization tools to make data more understandable and therefore more actionable Highlighting a range of topics such as curriculum design game based learning and learning support it is ideal for academicians policymakers administrators researchers education professionals instructional designers data analysts and students **Catalogue of Title Entries of Books and Other Articles Entered in the Office of the Register of Copyrights, Library of Congress, at Washington, D.C.** ,1900 Mechanical Engineering ,1984-06 Integrating Sustainability Thinking in Science and Engineering Curricula Walter Leal Filho,Ulisses M. Azeiteiro,Sandra Caeiro,Fátima Alves,2014-09-13 Including considerations of sustainability in universities activities has long since become mainstream However there is still much to be done with regard to the full integration of sustainability thinking into science and engineering curricula Among the problems that hinder progress in this field the lack of sound information on how to actually implement it is prominent Created in order to address this need this book presents a wealth of information on innovative approaches methods and tools that may be helpful in translating sustainability principles into practice Catalogue of the University of Michigan University of Michigan,1884 Announcements for the following year included in some vols **Senate documents** ,1883 Catalogue and Register University of Michigan,1883 Announcements for the following year included in some vols **Mines, Miners and Mining Interests of the United States in 1882** ,1882 **House documents** ,1884 *The Journal of Education* ,1895 *American Machinist* ,1895 **Sessional Papers - Legislature of the Province of Ontario** Ontario. Legislative Assembly,1889 *East European*

Accessions List Library of Congress. Processing Department,1960 *Engineering News* ,1892 *Annual Report* Illinois. Dept. of Labor,1883 Report for 1946 48 issued in 2 pts covers only two divisions pt 1 Division of Unemployment Compensation pt 2 State Employment Service Government Gazette Uttar Pradesh (India),1963 **The University** ,1884 Pamphlet of the Competitive Examination for Recruitment to the (1) Indian Railway Service of Engineers, (2) Central Engineering Service, Class I, and (3) Telegraph Engineering Service, Class I Held in November 1940 India. Public Service Commission,1941 **Parliamentary Papers** Great Britain. Parliament. House of Commons,1956 Minutes and Votes and Proceedings of the Parliament, with Papers Presented to Both Houses Western Australia. Parliament,1960

If you ally infatuation such a referred **Diploma In Mechanical Engineering Question Papers 2013** ebook that will manage to pay for you worth, get the no question best seller from us currently from several preferred authors. If you desire to entertaining books, lots of novels, tale, jokes, and more fictions collections are next launched, from best seller to one of the most current released.

You may not be perplexed to enjoy all books collections Diploma In Mechanical Engineering Question Papers 2013 that we will unconditionally offer. It is not approximately the costs. Its practically what you craving currently. This Diploma In Mechanical Engineering Question Papers 2013, as one of the most on the go sellers here will definitely be in the middle of the best options to review.

https://auld.rmjm.com/files/detail/index.jsp/Method_For_Napkin_Folding_Manual.pdf

Table of Contents Diploma In Mechanical Engineering Question Papers 2013

1. Understanding the eBook Diploma In Mechanical Engineering Question Papers 2013
    - The Rise of Digital Reading Diploma In Mechanical Engineering Question Papers 2013
    - Advantages of eBooks Over Traditional Books
2. Identifying Diploma In Mechanical Engineering Question Papers 2013
    - Exploring Different Genres
    - Considering Fiction vs. Non-Fiction
    - Determining Your Reading Goals
3. Choosing the Right eBook Platform
    - Popular eBook Platforms
    - Features to Look for in an Diploma In Mechanical Engineering Question Papers 2013
    - User-Friendly Interface
4. Exploring eBook Recommendations from Diploma In Mechanical Engineering Question Papers 2013
    - Personalized Recommendations
    - Diploma In Mechanical Engineering Question Papers 2013 User Reviews and Ratings

- Diploma In Mechanical Engineering Question Papers 2013 and Bestseller Lists
5. Accessing Diploma In Mechanical Engineering Question Papers 2013 Free and Paid eBooks
    - Diploma In Mechanical Engineering Question Papers 2013 Public Domain eBooks
    - Diploma In Mechanical Engineering Question Papers 2013 eBook Subscription Services
    - Diploma In Mechanical Engineering Question Papers 2013 Budget-Friendly Options
6. Navigating Diploma In Mechanical Engineering Question Papers 2013 eBook Formats
    - ePub, PDF, MOBI, and More
    - Diploma In Mechanical Engineering Question Papers 2013 Compatibility with Devices
    - Diploma In Mechanical Engineering Question Papers 2013 Enhanced eBook Features
7. Enhancing Your Reading Experience
    - Adjustable Fonts and Text Sizes of Diploma In Mechanical Engineering Question Papers 2013
    - Highlighting and Note-Taking Diploma In Mechanical Engineering Question Papers 2013
    - Interactive Elements Diploma In Mechanical Engineering Question Papers 2013
8. Staying Engaged with Diploma In Mechanical Engineering Question Papers 2013
    - Joining Online Reading Communities
    - Participating in Virtual Book Clubs
    - Following Authors and Publishers Diploma In Mechanical Engineering Question Papers 2013
9. Balancing eBooks and Physical Books Diploma In Mechanical Engineering Question Papers 2013
    - Benefits of a Digital Library
    - Creating a Diverse Reading Collection Diploma In Mechanical Engineering Question Papers 2013
10. Overcoming Reading Challenges
    - Dealing with Digital Eye Strain
    - Minimizing Distractions
    - Managing Screen Time
11. Cultivating a Reading Routine Diploma In Mechanical Engineering Question Papers 2013
    - Setting Reading Goals Diploma In Mechanical Engineering Question Papers 2013
    - Carving Out Dedicated Reading Time
12. Sourcing Reliable Information of Diploma In Mechanical Engineering Question Papers 2013
    - Fact-Checking eBook Content of Diploma In Mechanical Engineering Question Papers 2013
    - Distinguishing Credible Sources

13. Promoting Lifelong Learning
    - Utilizing eBooks for Skill Development
    - Exploring Educational eBooks
14. Embracing eBook Trends
    - Integration of Multimedia Elements
    - Interactive and Gamified eBooks

Diploma In Mechanical Engineering Question Papers 2013 Introduction

In the digital age, access to information has become easier than ever before. The ability to download Diploma In Mechanical Engineering Question Papers 2013 has revolutionized the way we consume written content. Whether you are a student looking for course material, an avid reader searching for your next favorite book, or a professional seeking research papers, the option to download Diploma In Mechanical Engineering Question Papers 2013 has opened up a world of possibilities. Downloading Diploma In Mechanical Engineering Question Papers 2013 provides numerous advantages over physical copies of books and documents. Firstly, it is incredibly convenient. Gone are the days of carrying around heavy textbooks or bulky folders filled with papers. With the click of a button, you can gain immediate access to valuable resources on any device. This convenience allows for efficient studying, researching, and reading on the go. Moreover, the cost-effective nature of downloading Diploma In Mechanical Engineering Question Papers 2013 has democratized knowledge. Traditional books and academic journals can be expensive, making it difficult for individuals with limited financial resources to access information. By offering free PDF downloads, publishers and authors are enabling a wider audience to benefit from their work. This inclusivity promotes equal opportunities for learning and personal growth. There are numerous websites and platforms where individuals can download Diploma In Mechanical Engineering Question Papers 2013. These websites range from academic databases offering research papers and journals to online libraries with an expansive collection of books from various genres. Many authors and publishers also upload their work to specific websites, granting readers access to their content without any charge. These platforms not only provide access to existing literature but also serve as an excellent platform for undiscovered authors to share their work with the world. However, it is essential to be cautious while downloading Diploma In Mechanical Engineering Question Papers 2013. Some websites may offer pirated or illegally obtained copies of copyrighted material. Engaging in such activities not only violates copyright laws but also undermines the efforts of authors, publishers, and researchers. To ensure ethical downloading, it is advisable to utilize reputable websites that prioritize the legal distribution of content. When downloading Diploma In Mechanical Engineering Question Papers 2013, users should also consider the potential security risks associated with online platforms. Malicious actors may exploit

vulnerabilities in unprotected websites to distribute malware or steal personal information. To protect themselves, individuals should ensure their devices have reliable antivirus software installed and validate the legitimacy of the websites they are downloading from. In conclusion, the ability to download Diploma In Mechanical Engineering Question Papers 2013 has transformed the way we access information. With the convenience, cost-effectiveness, and accessibility it offers, free PDF downloads have become a popular choice for students, researchers, and book lovers worldwide. However, it is crucial to engage in ethical downloading practices and prioritize personal security when utilizing online platforms. By doing so, individuals can make the most of the vast array of free PDF resources available and embark on a journey of continuous learning and intellectual growth.

FAQs About Diploma In Mechanical Engineering Question Papers 2013 Books

How do I know which eBook platform is the best for me? Finding the best eBook platform depends on your reading preferences and device compatibility. Research different platforms, read user reviews, and explore their features before making a choice. Are free eBooks of good quality? Yes, many reputable platforms offer high-quality free eBooks, including classics and public domain works. However, make sure to verify the source to ensure the eBook credibility. Can I read eBooks without an eReader? Absolutely! Most eBook platforms offer web-based readers or mobile apps that allow you to read eBooks on your computer, tablet, or smartphone. How do I avoid digital eye strain while reading eBooks? To prevent digital eye strain, take regular breaks, adjust the font size and background color, and ensure proper lighting while reading eBooks. What the advantage of interactive eBooks? Interactive eBooks incorporate multimedia elements, quizzes, and activities, enhancing the reader engagement and providing a more immersive learning experience. Diploma In Mechanical Engineering Question Papers 2013 is one of the best book in our library for free trial. We provide copy of Diploma In Mechanical Engineering Question Papers 2013 in digital format, so the resources that you find are reliable. There are also many Ebooks of related with Diploma In Mechanical Engineering Question Papers 2013. Where to download Diploma In Mechanical Engineering Question Papers 2013 online for free? Are you looking for Diploma In Mechanical Engineering Question Papers 2013 PDF? This is definitely going to save you time and cash in something you should think about.

Find Diploma In Mechanical Engineering Question Papers 2013 :

method for napkin folding manual

~~mitsubishi l200 parts manual~~

how to lick executive stress
accounting practice sales agreement
ingersoll 4020 parts manual
x3 00 service manual
20key stage 1 mathematics booklet
operating manual 4acmh
onity field service manual
2013 mathematics paper2 grade10
navigat 2100 user manual
~~year 5 english comprehension tests~~
biology hl paper may 2011
naughty girl an alpha step taboo romance english edition
blue pelican math unit 11 lesson 4

Diploma In Mechanical Engineering Question Papers 2013 :

todo tango cronache di una lunga convivenza i lem - Feb 17 2022
web offerte ibs todo tango cronache di una lunga convivenza lao meri todo tango cronache di una lunga convivenza è un libro di meri lao pubblicato da bompiani nella collana i lemuri acquista su ibs a 8 50 todo tango cronache di una lunga convivenza meri lao libri simili a todo tango cronache di una lunga convivenza
todo tango cronache di una lunga convivenza i lem - Aug 06 2023
web iniziative todo tango cronache di una lunga convivenza i lemuri vol aquí encontrarás música letras partituras videos tangos letras música partituras videos historias audio mp3
todo tango cronache di una lunga convivenza i lem copy - Nov 28 2022
web todo tango cronache di una lunga convivenza i lem 3 3 together their separate skills dunning s long career dedicated to musicology has spanned at least four decades and throughout it has had a specifically international character his studies at the university of amsterdam were crowned in 1969 with a doctorate and a dissertation entitled
todo tango cronache di una lunga convivenza i lem jerzy - Apr 21 2022
web todo tango cronache di una lunga convivenza i lem is available in our digital library an online access to it is set as public so you can get it instantly our book servers spans in multiple locations allowing you to get the most less latency time to download any of our books like this one

todo tango cronache di una lunga convivenza i lem - Mar 21 2022
web todo tango cronache di una lunga convivenza i lemuri vol 926 todotango a todo tango gotan project best of gotan project full album guadalupe pineda historia de un amor tango santa maria gotan project carlos di sarli roberto rufino 20 grandes éxitos tango vals milonga carlos di sarli alberto podesta collection 22 exitos

todo tango cronache di una lunga convivenza i lem - Sep 26 2022
web revelation todo tango cronache di una lunga convivenza i lem as capably as evaluation them wherever you are now the assistant bernard malamud 2014 04 03 time magazine s all time list of 100 novels frank alpine a drifter fleeing from his past runs straight into struggling brooklyn grocer morris bober

todo tango cronache di una lunga convivenza i lem pdf - Mar 01 2023
web todo tango cronache di una lunga convivenza i lem poesia per musica e musica per poesia may 14 2021 accompanying cd rom contains lettura ascolto e analisi del testo poetico musicale more detailed contents listing on p 9 10 the a to z of italian cinema apr 12 2021 the italian cinema is regarded as one of the great pillars of world

todo tango cronache di una lunga convivenza i lem pdf - Oct 08 2023
web todo tango cronache di una lunga convivenza i lem morning s at seven eric malpass 2008 01 12 three generations of the pentecost family live in a state of permanent disarray in a huge sprawling farmhouse seven year old gaylord pentecost is the innocent hero who observes the lives of the adults grandpa momma and poppa and two

todo tango cronache di una lunga convivenza i lem 2022 - Aug 26 2022
web todo tango cronache di una lunga convivenza i lem downloaded from legacy realaquatics co uk by guest pratt jaylen dai trovatori a paolo conte rowman littlefield publishers questo libro prende in esame i modi migliori di proporre la musica tratti dall esperienza dei più rinomati musicalizadores d j di tango di buenos

todo tango cronache di una lunga convivenza i lem pdf - May 23 2022
web apr 26 2023 online con le offerte ibs todo tango cronache di una lunga convivenza lao meri todo tango cronache di una lunga convivenza è un libro di meri lao pubblicato da bompiani nella collana i lemuri acquista su ibs a 8 50 todo tango cronache di una lunga convivenza meri lao libri simili a todo tango cronache

todo tango cronache di una lunga convivenza meri lao libro - Apr 02 2023
web todo tango cronache di una lunga convivenza è un libro di meri lao pubblicato da bompiani nella collana i lemuri acquista su ibs a 15 00

todo tango cronache di una lunga convivenza i lem pdf - Jun 04 2023
web or take notes while you read todo tango cronache di una lunga convivenza todo tango cronache di una lunga convivenza by meri lao may easily install this ebook i bring downloads as a pdf kindle dx word txt ppt rar and zip there are many books in

the world that can improve our knowledge one of them is the book entitled todo tango

letras de tango toda mi vida mas que tango parma - Jun 23 2022

web mar 16 2020 toda mi vida tango música aníbal troilo letra josé maría contursi hoy después de tanto tiempo de no verte de no hablarte ya cansado de buscarte siempre siempre siento que me voy muriendo por tu olvido lentamente y en el frío de mi frente

con toda mi alma bütün kalbimle tango facebook - Jul 25 2022

web con toda mi alma bütün kalbimle tango 260 likes bu sayfacıktaki niyetim her daim depreşik aşkımız tangonun ruhuma hitap eden kimi örneklerin

todo tango cronache di una lunga convivenza i lem full pdf - Dec 30 2022

web 9788845232824 todo tango cronache di una lunga convivenza lao meri todo tango cronache di una lunga convivenza è un ebook di lao meri pubblicato da bompiani a 6 49 il file è in formato epub con drm risparmia online con le offerte ibs todo tango cronache di una lunga convivenza lao meri todo tango

todo tango cronache di una lunga convivenza i lem pdf copy - Oct 28 2022

web introduction todo tango cronache di una lunga convivenza i lem pdf copy inside the show tango argentino antón gazenbeek 2020 05 28 during the dark years of the military dictatorship tango had fallen into oblivion all over the world most especially in

todo tango cronache di una lunga convivenza i lem full pdf - Sep 07 2023

web lunga convivenza compra l ebook todo tango cronache di una lunga convivenza i lemuri vol 926 di meri lao lo trovi in offerta a prezzi scontati su giuntialpunto itebook todo tango cronache di una lunga convivenza i varela con ledesma y lesica marcaron toda una época hoy los

todo tango cronache di una lunga convivenza google books - May 03 2023

web È l ultimo e più recente libro sul tango di meri lao un libro documentatissimo che rivela anche l importante e misconosciuto apporto delle donne e spazzando via gli stereotipi permette al lettore di addentrarsi in un rito dove gli emigranti di ieri e gli esuli di oggi si congiungono officiato da una musica multietnica da un canzoniere

todo tango cronache di una lunga convivenza google books - Jul 05 2023

web È l ultimo e più recente libro sul tango di meri lao grande amica di piazzolla e referente obbligato delle associazioni nate in italia intorno al ballo rioplatense testimone privilegiata dell epoca d oro del genere musicale sudamericano

todo tango cronache di una lunga convivenza i lem pdf - Jan 31 2023

web 4 todo tango cronache di una lunga convivenza i lem 2022 12 25 pubblicato da bompiani a 6 49 il file è in formato epub con drm risparmia online con le offerte ibs todo tango cronache di una lunga convivenza lao meri todo tango cronache di una

lunga convivenza è un libro di meri lao pubblicato da bompiani nella

darum ist er heilig der wahre johannes paul ii er - Oct 15 2023

web und inspiriert auf den schwingen des adlers dem traditionellen christlichen symbol für johannes trägt eriugena den leser empor und lässt ihn den ursprung des universums und sein eigenes wesen aus einer perspektive schauen die weit über die welt der erscheinungen hinausgeht für eriugena ist gott

darum ist er heilig der wahre johannes paul ii er full pdf - Aug 01 2022

web john paul ii may 19 2023 with over 150 glossy color photos by his official photographer and many images which have never been viewed outside of the vatican john paul ii a light for the world serves as both a celebration and a memorial of the world s most celebrated divine leader johannes paul ii mann und frau schuf er nov 13 2022

darum ist er heilig der wahre johannes paul ii er pdf johann - Jun 30 2022

web jul 6 2023 darum ist er heilig der wahre johannes paul ii er pdf right here we have countless ebook darum ist er heilig der wahre johannes paul ii er pdf and collections to check out we additionally give variant types and plus type of the books to browse the adequate book fiction history novel scientific research as with ease as various

9783863570767 darum ist er heilig der wahre johannes paul ii - Jan 06 2023

web darum ist er heilig der wahre johannes paul ii erzählt aus der sicht seines postulators im seligsprechungsprozess von oder slawomir beim zvab com isbn 10 3863570766 isbn 13 9783863570767 fe medienverlags gmbh 2014 hardcover

darum ist er heilig der wahre johannes paul ii er renewalcc - Feb 24 2022

web darum ist er heilig der wahre johannes paul ii er 5 5 für lehrer und kinder in bürger und landschulen von h g zerrennersec hzig upanishad s des vedad martin luthers werkelegend e der heiligen im vereine mit anderen herausgegebe n von johannes laicus fortgesetzt von ida gräfin hahn hahn etcdarum ist er heiligdie fest briefe

darum ist er heilig der wahre johannes paul ii er - May 10 2023

web dass johannes paul ii ein enormes charisma hatte er damit auch in den politischen umwälzungsprozessen in osteuropa eine rolle spielte ist unbestritten nach innen hin aber ist die kirche von einer zerreißprobe bestimmt der band geht der frage nach ob johannes paul ii der kirche nicht schwere

darum ist er heilig der wahre johannes paul ii erzählt aus der - Oct 03 2022

web was den eidgenossen heilig ist kath net darum ist er heilig digna media wahre liebe die bibel ist das lebendige wort gottes das wahre israel gottes gesunde lehre christi darum ist er heilig der wahre johannes paul ii erzählt ihr sollt heilig sein denn ich bin heilig 2 mo 11 45 darum ist er heilig fe medienverlags gmbh die art von

darum ist er heilig der wahre johannes paul ii er download - Jul 12 2023

web darum ist er heilig der wahre johannes paul ii er 3 3 1520 f verteidigungsrede auf dem reichstag zu worms defense

speech at the diet of worms 1921 g vom ehelichen leben on married life 1522 i von der wiedertaufe an zwei pfarrherrn on rebaptism for two pastors 1528 j ein feste burg ist unser gott our god is a

darum ist er heilig der wahre johannes paul ii er 2023 - Apr 28 2022

web darum ist er heilig der wahre johannes paul ii er die bibel oder die ganze heilige schrift des alten und neuen testaments jul 14 2021 das wesen des christenthums jul 26 2022 der wahre römisch catholische saltzburger das ist catholische außlegung aller epistlen und evangelien deß gantzen jahrs worinn die wahre catholische sowohl

darum ist er heilig der wahre johannes paul ii er pdf - Nov 04 2022

web darum ist er heilig der wahre johannes paul ii er as one of the most keen sellers here will completely be along with the best options to review tot und heilig hubertus lutterbach 2008

die heiligsprechung von johannes paul ii gibt es wunder - Feb 07 2023

web apr 20 2014 allein aus polen sollen sich millionen pilger aufgemacht haben um am kommenden sonntag der heiligsprechung ihres papstes karol wojtyla alias johannes paul ii beizuwohnen auch der zweite

darum wurde johannes paul ii heilig gesprochen web de - Aug 13 2023

web das presseamt des vatikans gibt die zahl der heilig und seligsprechungen unter dem polnischen kirchenoberhaupt johannes paul ii mit 1 820 an damit hat der pole mehr menschen heilig gesprochen

28 juli 1999 johannes paul ii vatican - Mar 08 2023

web jul 28 1999 johannes paul ii generalaudienz mittwoch 28 juli 1999 liebe schwestern und brüder 1 gott ist ein unendlich guter und barmherziger vater aber der mensch berufen ihm in freiheit zu antworten kann sich leider dafür entscheiden dessen liebe und vergebung zurückzuweisen er entzieht sich so für immer der freudvollen

pdf darum ist er heilig der wahre johannes paul ii er - Sep 14 2023

web darum ist er heilig der wahre johannes paul ii er was das wort heilig bedeutet sonntagsblatt 360 grad feb 27 2022 mit dem wort heilig wurde der lateinische begriff sanctus übersetzt der auf das verb sancire also begrenzen umschließen zurückgeht begrenzt war das fanum der heilige abgesonderte bezirk das pro

darum ist er heilig der wahre johannes paul ii er pdf copy - Sep 02 2022

web darum ist er heilig der wahre johannes paul ii er pdf pages 3 3 darum ist er heilig der wahre johannes paul ii er pdf upload betty f murray 3 3 downloaded from support ortax org on september 3 2023 by betty f murray weisen aus dem 9 jahrhundert

darum ist er heilig der wahre johannes paul ii er 2023 - May 30 2022

web bericht über papst johannes paul ii wird zum politikum stern de kath net kat net alte messe auf dem altenteil ein jahr traditionis custodes katholisch de 22 oktober der heilige johannes paul ii opus dei papst franziskus deutet friedensmission in

der ukraine an stern de zum tod von hans küng er war ein kritischer theologe

darum ist er heilig der wahre johannes paul ii erzählt aus der - Dec 05 2022

web erzabtei beuron wahre liebe die bibel ist das lebendige wort gottes darum ist er heilig der wahre johannes paul ii erzählt wer ist der allein wahre gott wachtturm online bibliothek harms vortrag klostertag heilige 12 6 kloster bursfelde verteidigung der wahren kath kirche zeugen der wahrheit

johannes paul ii ein heiliger unserer zeit papst - Mar 28 2022

web zitate von johannes paul ii die mitte der nacht ist auch schon der anfang eines neuen tages beten wir daß überall auf der welt eine zivilisation der liebe entstehen kann der größte erfolg des teufels besteht darin den eindruck zu erwecken daß es ihn nicht gibt krieg ist immer eine niederlage der menschheit

free pdf download darum ist er heilig der wahre johannes paul ii er - Apr 09 2023

web darum ist er heilig der wahre johannes paul ii er studies in new testament language and text jun 09 2023 the life of william cowper jul 06 2020 ablution initiation and baptism methodological considerations nov 09 2020 the present volumes is the result of an international collaboration of researchers who are excellent within their

darum ist er heilig katholisch informiert ch - Jun 11 2023

web apr 10 2014 papst johannes paul ii weitere literatur darum ist er heilig der wahre johannes paul ii erzählt aus der sicht seines postulators im seligsprechungsprozess kurzbeschreibung er war der medienpräsenteste papst der kirchengeschichte weshalb viele menschen nur sein äußeres auftreten wahr nahmen johannes paul ii aber war

misc tractors kioti lk 3054 xs 4wd tlb tractor service manual - Jan 09 2023

web jul 29 2020 misc tractors kioti lk 3054 xs 4wd tlb tractor service manual our misc tractors kioti lk 3054 xs 4wd tlb tractor service manual is a high quality reproduction of factory manuals from the oem original equipment manufacturer tractor service manuals tractor shop manual repair manual provide detailed service and

manuals kioti tractors - Aug 04 2022

web nx5510 cab nx5510 hst cab nx6010 hst daedong usa inc 6300 kioti drive wendell nc 27591 phone 1 877 go kioti specifications and design are subject to change without notice daedong usa inc kioti tractor division is a wholly owned subsidiary of daedong corporation

kioti lk3054 repair manual tractorbynet - Jul 15 2023

web feb 11 2006 we use the kioti 3054 for grass cutting weed badgering hole drilling and post pounding and all around dirth work the kioti tractor is great machine i would if i could send digital pictures but i have webtv and it not possible with webtv how big of a job to changes the valve cover gasket what is the price of the kioti repair manual

factory original kioti wheel tractors lk3054 manuals diy repair manuals - Dec 08 2022

web original factory dealership manuals for kioti wheel tractors lk3054 by diy repair manuals best selection and lowest prices on operator manual service repair manuals electrical wiring diagram and parts catalogs diy is the top rated supplier of printed dealership factory manuals all years in stock

kioti lk3054 workshop service repair manual best manuals - May 13 2023

web jul 1 2023 our repair manual owner s manuals and parts catalogs downloads contain all information you ll need to perform repairs look up parts or do routine maintenance on your machine the manual includes pictures and easy to follow directions on what tools are needed and how the repair is performed just imagine how much you can save by doing

kioti lk3054 repair manual page 2 tractorbynet - Nov 07 2022

web mar 29 2018 font font color blue class small would like to know wheir i can buy a repair manual for my kioti lk3054 i have a oil leak that looks like it s coming from the valve cover or the top of the engine where can i buy a valve cover gasket also the throttle control leaver does not hold the rpm s i use a piece of wood to brace the

kioti lk3054 compact utility tractor review and specs tractor - Mar 31 2022

web the kioti lk3054 is a 4wd compact utility tractor manufactured by kioti a part of daedong in daegu south korea from 1993 to 2003 the kioti lk3054 is equipped with a 1 4 l 85 1 cu in three cylinder diesel engine and a mechanical shuttle transmission with 8 forward and 8 reverse gears

kioti lk3054xs workshop manual pdf download manualslib - Aug 16 2023

web view and download kioti lk3054xs workshop manual online lk3054xs tractor pdf manual download

kioti lk3054 operator s manual tractorbynet - Jan 29 2022

web apr 16 2015 tractor kioti lk3054 first post ever on any blog i own a kioti lk3054 amazingly hard to get info on these amazing hard and expensive to get manuals i do have an operator s manual in pdf

kioti lk3054 wheel tractor operator s manual - Feb 27 2022

web original factory kioti lk3054 wheel tractor operator s manual by diy repair manuals best selection and lowest prices on owners manual service repair manuals electrical wiring diagram and parts catalogs

kioti lk3054 workshop service repair manual automotive manuals - Dec 28 2021

web kioti lk3054 workshop service repair manual this manual contains information and data to this model has specs diagrams and actual real photo illustrations these technical manual is as good as it gets for diagnosing repairing

repair manual m r kioti lk3054 southern global tractor - Apr 12 2023

web manuals repair manual m r kioti lk3054 repair manual m r kioti lk3054 0 there are no reviews yet 54 00 repair manual m r kioti lk3054 repair manuals provide comprehensive service and repair instructions for

help service manual for lk3054 tractor forum - Jun 14 2023

web aug 6 2013 kioti wants 130 00 for the lk3054xs and this is the only manual available the xs tractor doesn t have the same front axle and mine isnt covered in the manual does anyone know where i can buy or get a service manual for a straight kioti lk3054 paper or pdf or any other format would work thanks in advance confused reply save

kioti lk3054 repair manual page 3 tractorbynet - Jul 03 2022

web apr 1 2018 my understanding was an lk 30 was basically a ck 30 front end with a lk 3054 back end don t quote me on that could be wrong apr 1 2018 kioti lk3054 repair manual

kioti lk3054 wheel tractor service manual diy repair manuals - Jun 02 2022

web for do it yourself tractor repair service and parts lookup parts manuals are key to viewing how everything goes together the kubota ipl illustrated parts list exploded views will also assist you in servicing rebuilding

kioti lk3054 specs engine transmission dimensions pdf manuals - May 01 2022

web the kioti lk3054 specification production power mechanical hydraulics tractor hitch power take off pto electrical engine transmission dimensions

kioti tractor user manuals download manualslib - Mar 11 2023

web download 121 kioti tractor pdf manuals user manuals kioti tractor operating guides and service manuals

kioti lk 3054 operators manual tractor forum - Oct 06 2022

web jul 25 2021 view and download kioti lk3054xs workshop manual online lk3054xs tractor pdf manual download

kioti lk3054 tractor parts manual jensales - Sep 05 2022

web kioti lk3054 tractor service manual kioti service manual format new oem original equipment manufacturer pages complete manual fits 0 00 add to cart kioti lk3054 tractor 8 1 2 inch clutch unit reman kioti lk3054 clutchincluded in the sell price is a 70 core exchange charge the core charge

tractordata com kioti lk3054 tractor information - Feb 10 2023

web jul 15 2023 lk3052 lk3054 lk3504 30 5hp 30 5hp 35 0hp kioti lk3054 transmission 8 speed synchronized shuttle transmission details photos kioti lk3054 photos references the leader of the pack published in 1999 by kitoi page information copyright 2023 tractordata com