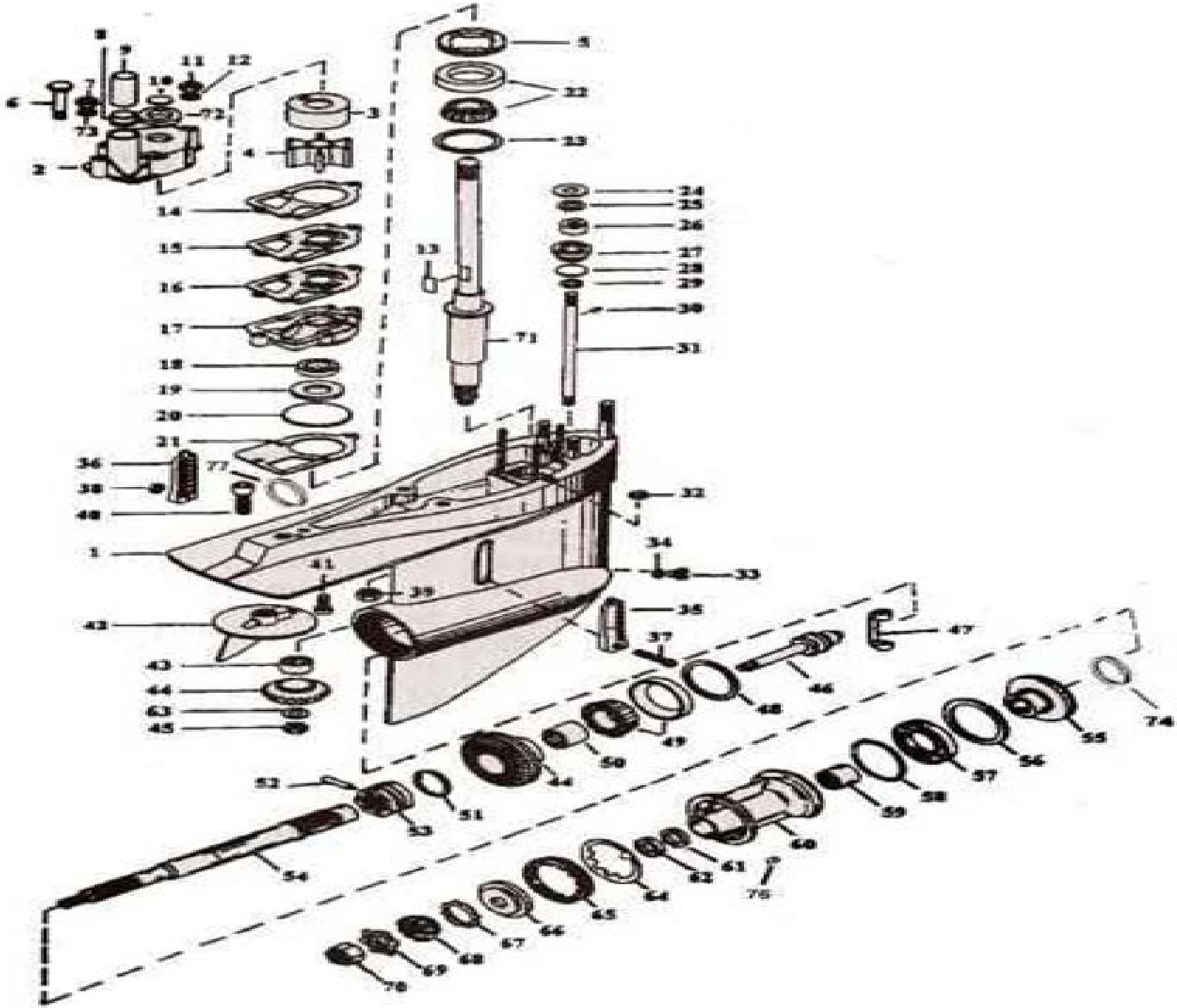

Mercruiser Alpha One Lower Unit Diagram

RJ Alexander

Mercruiser Alpha One Lower Unit Diagram:

Content Rich Jon Wuebben,2008 The Complete SEO Copywriting Guide to Search Engine Rankings and Sales Conversion *Boating* ,2004-06 **Popular Mechanics** ,1993-09 Popular Mechanics inspires instructs and influences readers to help them master the modern world Whether it s practical DIY home improvement tips gadgets and digital technology information on the newest cars or the latest breakthroughs in science PM is the ultimate guide to our high tech lifestyle *Mercury Stern Drive (1964 - 1992)* Seloc,1999-05-01 SELOC Marine maintenance and repair manuals offer the most comprehensive authoritative information available for outboard inboard stern drive and diesel engines as well as personal watercraft SELOC has been the leading source of how to information for the marine industry since 1974 Designed and written to serve the needs of the professional mechanic do it yourself boat enthusiast instructor and student these manuals are based on actual teardowns done by Chilton Marine s editors authors in our on site facility Providing complete coverage on everything from basic maintenance to engine overhaul every manual features Simple to follow step by step illustrated procedures Hundreds of exploded drawings photographs and tables Troubleshooting sections accurate specifications and wiring diagrams Recognized and used by technical trade schools as well as the U S military Covers Type 1 Alpha MR and Bravo I and II units powered by Ford and GM 4 cylinder in line 6 V6 and V8 engines Over 1 430 illustrations Boating ,1999-04 **List** ,1948 *MotorBoating* ,1989-04 Motorboating - ND ,1985-07 **Popular Mechanics** ,1993-09 Popular Mechanics inspires instructs and influences readers to help them master the modern world Whether it s practical DIY home improvement tips gadgets and digital technology information on the newest cars or the latest breakthroughs in science PM is the ultimate guide to our high tech lifestyle **Atlantic Fisherman** ,1989 Boating ,1989-02 Ski ,1997-02 *The Commercial Motor* ,1975 Engineering ,1887 **A Manual of civil Engineering** William John Macquorn Rankine,1874 The popular educator Popular educator,1876 *Engineering Mechanics* ,1891 The Engineer ,1886 *The Athenaeum* ,1911 **Seloc Mercury Outboards 1965-89 Repair Manual** Joan Coles,Clarence W. Coles,1998

Immerse yourself in heartwarming tales of love and emotion with Crafted by is touching creation, Experience Loveis Journey in **Mercruiser Alpha One Lower Unit Diagram** . This emotionally charged ebook, available for download in a PDF format (*), is a celebration of love in all its forms. Download now and let the warmth of these stories envelop your heart.

https://auld.rmjm.com/public/browse/default.aspx/Porsche_911_Carrera_1993_1998_Service_Repair_Workshop_Manual.pdf

Table of Contents Mercruiser Alpha One Lower Unit Diagram

1. Understanding the eBook Mercruiser Alpha One Lower Unit Diagram
    - The Rise of Digital Reading Mercruiser Alpha One Lower Unit Diagram
    - Advantages of eBooks Over Traditional Books
2. Identifying Mercruiser Alpha One Lower Unit Diagram
    - Exploring Different Genres
    - Considering Fiction vs. Non-Fiction
    - Determining Your Reading Goals
3. Choosing the Right eBook Platform
    - Popular eBook Platforms
    - Features to Look for in an Mercruiser Alpha One Lower Unit Diagram
    - User-Friendly Interface
4. Exploring eBook Recommendations from Mercruiser Alpha One Lower Unit Diagram
    - Personalized Recommendations
    - Mercruiser Alpha One Lower Unit Diagram User Reviews and Ratings
    - Mercruiser Alpha One Lower Unit Diagram and Bestseller Lists
5. Accessing Mercruiser Alpha One Lower Unit Diagram Free and Paid eBooks
    - Mercruiser Alpha One Lower Unit Diagram Public Domain eBooks
    - Mercruiser Alpha One Lower Unit Diagram eBook Subscription Services
    - Mercruiser Alpha One Lower Unit Diagram Budget-Friendly Options
6. Navigating Mercruiser Alpha One Lower Unit Diagram eBook Formats

- ePub, PDF, MOBI, and More
- Mercruiser Alpha One Lower Unit Diagram Compatibility with Devices
- Mercruiser Alpha One Lower Unit Diagram Enhanced eBook Features

7. Enhancing Your Reading Experience
    - Adjustable Fonts and Text Sizes of Mercruiser Alpha One Lower Unit Diagram
    - Highlighting and Note-Taking Mercruiser Alpha One Lower Unit Diagram
    - Interactive Elements Mercruiser Alpha One Lower Unit Diagram
8. Staying Engaged with Mercruiser Alpha One Lower Unit Diagram
    - Joining Online Reading Communities
    - Participating in Virtual Book Clubs
    - Following Authors and Publishers Mercruiser Alpha One Lower Unit Diagram
9. Balancing eBooks and Physical Books Mercruiser Alpha One Lower Unit Diagram
    - Benefits of a Digital Library
    - Creating a Diverse Reading Collection Mercruiser Alpha One Lower Unit Diagram
10. Overcoming Reading Challenges
    - Dealing with Digital Eye Strain
    - Minimizing Distractions
    - Managing Screen Time
11. Cultivating a Reading Routine Mercruiser Alpha One Lower Unit Diagram
    - Setting Reading Goals Mercruiser Alpha One Lower Unit Diagram
    - Carving Out Dedicated Reading Time
12. Sourcing Reliable Information of Mercruiser Alpha One Lower Unit Diagram
    - Fact-Checking eBook Content of Mercruiser Alpha One Lower Unit Diagram
    - Distinguishing Credible Sources
13. Promoting Lifelong Learning
    - Utilizing eBooks for Skill Development
    - Exploring Educational eBooks
14. Embracing eBook Trends
    - Integration of Multimedia Elements
    - Interactive and Gamified eBooks

Mercruiser Alpha One Lower Unit Diagram Introduction

In todays digital age, the availability of Mercruiser Alpha One Lower Unit Diagram books and manuals for download has revolutionized the way we access information. Gone are the days of physically flipping through pages and carrying heavy textbooks or manuals. With just a few clicks, we can now access a wealth of knowledge from the comfort of our own homes or on the go. This article will explore the advantages of Mercruiser Alpha One Lower Unit Diagram books and manuals for download, along with some popular platforms that offer these resources. One of the significant advantages of Mercruiser Alpha One Lower Unit Diagram books and manuals for download is the cost-saving aspect. Traditional books and manuals can be costly, especially if you need to purchase several of them for educational or professional purposes. By accessing Mercruiser Alpha One Lower Unit Diagram versions, you eliminate the need to spend money on physical copies. This not only saves you money but also reduces the environmental impact associated with book production and transportation. Furthermore, Mercruiser Alpha One Lower Unit Diagram books and manuals for download are incredibly convenient. With just a computer or smartphone and an internet connection, you can access a vast library of resources on any subject imaginable. Whether youre a student looking for textbooks, a professional seeking industry-specific manuals, or someone interested in self-improvement, these digital resources provide an efficient and accessible means of acquiring knowledge. Moreover, PDF books and manuals offer a range of benefits compared to other digital formats. PDF files are designed to retain their formatting regardless of the device used to open them. This ensures that the content appears exactly as intended by the author, with no loss of formatting or missing graphics. Additionally, PDF files can be easily annotated, bookmarked, and searched for specific terms, making them highly practical for studying or referencing. When it comes to accessing Mercruiser Alpha One Lower Unit Diagram books and manuals, several platforms offer an extensive collection of resources. One such platform is Project Gutenberg, a nonprofit organization that provides over 60,000 free eBooks. These books are primarily in the public domain, meaning they can be freely distributed and downloaded. Project Gutenberg offers a wide range of classic literature, making it an excellent resource for literature enthusiasts. Another popular platform for Mercruiser Alpha One Lower Unit Diagram books and manuals is Open Library. Open Library is an initiative of the Internet Archive, a non-profit organization dedicated to digitizing cultural artifacts and making them accessible to the public. Open Library hosts millions of books, including both public domain works and contemporary titles. It also allows users to borrow digital copies of certain books for a limited period, similar to a library lending system. Additionally, many universities and educational institutions have their own digital libraries that provide free access to PDF books and manuals. These libraries often offer academic texts, research papers, and technical manuals, making them invaluable resources for students and researchers. Some notable examples include MIT OpenCourseWare, which offers free access to course materials from the Massachusetts Institute of Technology, and the Digital Public Library of America, which provides a vast collection of digitized books and

historical documents. In conclusion, Mercruiser Alpha One Lower Unit Diagram books and manuals for download have transformed the way we access information. They provide a cost-effective and convenient means of acquiring knowledge, offering the ability to access a vast library of resources at our fingertips. With platforms like Project Gutenberg, Open Library, and various digital libraries offered by educational institutions, we have access to an ever-expanding collection of books and manuals. Whether for educational, professional, or personal purposes, these digital resources serve as valuable tools for continuous learning and self-improvement. So why not take advantage of the vast world of Mercruiser Alpha One Lower Unit Diagram books and manuals for download and embark on your journey of knowledge?

FAQs About Mercruiser Alpha One Lower Unit Diagram Books

How do I know which eBook platform is the best for me? Finding the best eBook platform depends on your reading preferences and device compatibility. Research different platforms, read user reviews, and explore their features before making a choice. Are free eBooks of good quality? Yes, many reputable platforms offer high-quality free eBooks, including classics and public domain works. However, make sure to verify the source to ensure the eBook credibility. Can I read eBooks without an eReader? Absolutely! Most eBook platforms offer webbased readers or mobile apps that allow you to read eBooks on your computer, tablet, or smartphone. How do I avoid digital eye strain while reading eBooks? To prevent digital eye strain, take regular breaks, adjust the font size and background color, and ensure proper lighting while reading eBooks. What the advantage of interactive eBooks? Interactive eBooks incorporate multimedia elements, quizzes, and activities, enhancing the reader engagement and providing a more immersive learning experience. Mercruiser Alpha One Lower Unit Diagram is one of the best book in our library for free trial. We provide copy of Mercruiser Alpha One Lower Unit Diagram in digital format, so the resources that you find are reliable. There are also many Ebooks of related with Mercruiser Alpha One Lower Unit Diagram. Where to download Mercruiser Alpha One Lower Unit Diagram online for free? Are you looking for Mercruiser Alpha One Lower Unit Diagram PDF? This is definitely going to save you time and cash in something you should think about. If you trying to find then search around for online. Without a doubt there are numerous these available and many of them have the freedom. However without doubt you receive whatever you purchase. An alternate way to get ideas is always to check another Mercruiser Alpha One Lower Unit Diagram. This method for see exactly what may be included and adopt these ideas to your book. This site will almost certainly help you save time and effort, money and stress. If you are looking for free books then you really should consider finding to assist you try this. Several of Mercruiser Alpha One Lower Unit Diagram are for sale to free while some are payable. If you arent sure if the books you would like to download works with for usage along with your computer, it is possible to download free trials. The free guides make it easy for someone to

free access online library for download books to your device. You can get free download on free trial for lots of books categories. Our library is the biggest of these that have literally hundreds of thousands of different products categories represented. You will also see that there are specific sites catered to different product types or categories, brands or niches related with Mercruiser Alpha One Lower Unit Diagram. So depending on what exactly you are searching, you will be able to choose e books to suit your own need. Need to access completely for Campbell Biology Seventh Edition book? Access Ebook without any digging. And by having access to our ebook online or by storing it on your computer, you have convenient answers with Mercruiser Alpha One Lower Unit Diagram To get started finding Mercruiser Alpha One Lower Unit Diagram, you are right to find our website which has a comprehensive collection of books online. Our library is the biggest of these that have literally hundreds of thousands of different products represented. You will also see that there are specific sites catered to different categories or niches related with Mercruiser Alpha One Lower Unit Diagram So depending on what exactly you are searching, you will be able tochoose ebook to suit your own need. Thank you for reading Mercruiser Alpha One Lower Unit Diagram. Maybe you have knowledge that, people have search numerous times for their favorite readings like this Mercruiser Alpha One Lower Unit Diagram, but end up in harmful downloads. Rather than reading a good book with a cup of coffee in the afternoon, instead they juggled with some harmful bugs inside their laptop. Mercruiser Alpha One Lower Unit Diagram is available in our book collection an online access to it is set as public so you can download it instantly. Our digital library spans in multiple locations, allowing you to get the most less latency time to download any of our books like this one. Merely said, Mercruiser Alpha One Lower Unit Diagram is universally compatible with any devices to read.

Find Mercruiser Alpha One Lower Unit Diagram :

porsche 911 carrera 1993 1998 service repair workshop manual
natus neo blue service manual
~~safeway safety manual~~
2009 audi tt camshaft seal manual
50 energy high recipe refreshment smoothie
mercruiser alpha one manual 86 thompson
osha manual on forklift safety
girl he left behind harlequin romance no 3111
exposition of the bible 2vol
accounting practice set answers tee time merchandise
zenith xbv342 manual

zoom 52 guitar pedal manual
case 821e payloader maintenance manual
2014 exampler papers physical sciences
diploma in electrical engineering syllabus wbscte

Mercruiser Alpha One Lower Unit Diagram :

additional science ch2hp h physics maths tutor - Mar 08 2023
web january 2013 additional science ch2hp unit chemistry c2 chemistry unit chemistry c2 thursday 24 january 2013 9 00 am to 10 00 am for this paper you must have the
additional science chemistry ch2hp specification 4408 - Mar 28 2022
web the assessment and qualifications alliance aqa is a company limited by guarantee registered in england and wales company number 3644723 and a registered charity
additional science physics - Dec 05 2022
web mark scheme gcse additional science physics ph2hp june 2015 5 of 16 3 8 accept allow accept is used to indicate an equivalent answer to that given on the
aqa additional science jan13 ph2hp past paper - May 10 2023
web aqa additional science jan13 ph2hp past paper author eckhard herbig from orientation sutd edu sg subject aqa additional science jan13 ph2hp past paper
additional science physics ph2hp specification 4408 4403 - Jul 12 2023
web mark scheme general certificate of secondary education physics ph2hp june 2013 3 information to examiners 1 general the mark scheme for each question shows
pdf aqa additional science jan13 ph2hp past paper - Apr 09 2023
web aqa additional science jan13 ph2hp past paper colloid and interface science in pharmaceutical research and development mar 05 2020 colloid and interface
additional science ph2hp h revision science - Jan 06 2023
web june 2013 additional science ph2hp unit physics p2 physics unit physics p2 thursday 23 may 2013 9 00 am to 10 00 am for this paper you must have a ruler a calculator the
aqa additional science physics january 2114 - Jun 30 2022
web aqa science gcse additional science aqa additional science physics january 2013 ph2fp aqa science gcse additional science gcse aqa additional science

gcse additional science biology mark scheme unit 02 biology - Nov 23 2021
web january 2013 additional science biology specification 4408 4401 bl2hp unit biology 2 final mark scheme mark schemes are prepared by the principal examiner
aqa additional science jan13 ph2hp past paper pdf - Aug 13 2023
web right here we have countless ebook aqa additional science jan13 ph2hp past paper and collections to check out we additionally manage to pay for variant types and
additional science chemistry ch2hp specification 4408 - Feb 07 2023
web general certificate of secondary education january 2013 additional science chemistry specification 4408 4402 unit 2 chemistry 2 final ch2hp mark scheme mark
additional science biology - Jan 26 2022
web aqa qualifications gcse additional science biology bl2hp mark scheme 4405 4401 june 2014 version 1 0 final mark schemes are prepared by the lead
aqa additional science physics january 2013 ph2fp - Dec 25 2021
web aqa additional science physics january 2013 ph2fp getting the books aqa additional science physics january 2013 ph2fp now is not type of inspiring means you could not
additional science ph2hp h london maths tutors - May 30 2022
web additional science ph2hp unit physics p2 physics unit physics p2 wednesday 30 may 2012 1 30 pm to 2 30 pm for this paper you must have a ruler the physics equations
aqa additional science jan13 ph2hp past paper 2015eeglobalsip - Sep 02 2022
web mar 31 2023 aqa gcse science jul 23 2022 lots of questions including those that require longer text answers give students plenty of practice on all types of exam
additional science physics - Oct 03 2022
web additional science physics ph2hp mark scheme 4408 4403 june 2014 version 1 0 final mark schemes are prepared by the lead assessment writer and considered
aqa ph2hp may 2013 mark scheme orientation sutd edu - Apr 28 2022
web for ph2hp 2013 aqa additional science ph2hp 2013 mark scheme aqa additional science ph2hp 2013 mark scheme novanet answers to geography
additional science physics - Nov 04 2022
web mark scheme gcse additional science physics ph2hp june 2016 5 of 16 3 8 accept allow accept is used to indicate an equivalent answer to that given on the

additional science bl2hp h physics maths tutor - Aug 01 2022
web january 2013 additional science bl2hp unit biology b2 biology unit biology b2 tuesday 22 january 2013 9 00 am to 10 00 am for this paper you must have a ruler you may
additional science ph2hp h physics maths tutor - Sep 14 2023
web physics unit physics p2 friday 25 january 2013 1 30 pm to 2 30 pm ph2hp h for this paper you must have a ruler a calculator the physics equations sheet enclosed time
read online aqa additional science jan13 ph2hp past paper - Jun 11 2023
web additional science january 2013 additional science bl2hp biology may 2013 additional science german translation linguee aqa additional science jan13 ph2hp past paper
final mark scheme science skool - Oct 15 2023
web additional science physics specification 4408 4403 ph2hp unit physics 2 final aqa is a company mark scheme general certificate of secondary education
aqa additional science january 2013 ph2hp pdf ftp dartgo - Feb 24 2022
web aqa additional science january 2013 ph2hp education in the united kingdom food and cooking skills education gender identity and educational leadership the colour of
communityvoices post gazette com - Dec 27 2021
web the crossword solver found 32 answers to carpentry tool 5 5 letters crossword clue the crossword solver finds answers to classic crosswords and cryptic crossword
carpentry workbook fifth edition answer key - Apr 30 2022
web nov 5 2022 middle of guides you could enjoy now is carpentry workbook fifth edition answer key below evergreen a guide to writing with readings compact edition
carpentry fifth edition level 1 answer key answers for 2023 - Jul 14 2023
web 5153 carpentry fifth edition level 1 answer key most popular 979 kb s 8520 carpentry 5th edition answer key myilibrary org carpentry 5th edition canadian
carpentry 5th ed workbook answer key by atp staff alibris - Jan 08 2023
web buy carpentry 5th ed workbook answer key by atp staff online at alibris we have new and used copies available in 0 edition starting at shop now
carpentry workbook fifth edition answer key pittsburgh post - Jan 28 2022
web communityvoices post gazette com
isbn 9780826908025 carpentry workbook answer key 5th - May 12 2023

web find 9780826908025 carpentry workbook answer key 5th edition by proctor at over 30 bookstores buy rent or sell
carpentry answer key 5th edition powell s books - Dec 07 2022
web carpentry answer key 5th edition by koel available in pamphlet on powells com also read synopsis and reviews
carpentry tool 5 crossword clue wordplays com - Nov 25 2021

carpentry workbook answer key by atp staff goodreads - Feb 09 2023
web aug 1 2008 atp staff 4 50 4 ratings0 reviews includes answers to workbook questions paperback published august 1 2008
carpentry workbook fifth edition answer key - Mar 30 2022
web mar 24 2023 merely said the carpentry workbook fifth edition answer key is universally compatible taking into consideration any devices to read carpentry leonard
modern carpentry workbook answer key answers for 2023 - Jun 13 2023
web modern carpentry workbook answer key download modern carpentry workbook answer key filename speed downloads modern carpentry workbook answer key
carpentry 5th edition workbook 5th edition - Nov 06 2022
web carpentry fifth edition answer key download carpentry fifth edition answer key filename speed downloads carpentry fifth edition answer key 2191 kb s 54
carpentry workbook fifth edition answers copy wrbb neu - Sep 04 2022
web 9780521732710 frontmatter pdf answer key 65 acknowledgements 80 978 0 521 73271 0 objective pet workbook with answers second edition louise hashemi
carpentry workbook fifth edition answers thebookee net - Aug 03 2022
web carpentry workbook fifth edition answer key c63079f6373a45a61e0862f867529fcc prepare the carpentry workbook fifth edition answer to entrance every morning is
carpentry 5th ed workbook answer key paperbackswap com - Mar 10 2023
web carpentry 5th ed workbook answer key by atp staff paperback 9780826908025
carpentry 5th ed workbook answer key abebooks - Apr 11 2023
web abebooks com carpentry 5th ed workbook answer key 9780826908025 by atp staff and a great selection of similar new used and collectible books available now at great
carpentry workbook fifth edition answers copy uniport edu - Jun 01 2022
web nov 22 2022 carpentry workbook fifth edition answer key that you are looking for it will unquestionably squander the

time however below taking into account you visit this

best pdf carpentry 5th ed workbook answer key full books - Aug 15 2023

web nov 18 2020 workbook answer key read ebook online pdf epub kindle carpentry 5th ed workbook answer key download ebook pdf epub book in english language

carpentry fifth edition answer key answers for 2023 exams - Oct 05 2022

web subject carpentry workbook fifth edition answer key keywords carpentry workbook fifth edition answer key download carpentry workbook fifth edition

carpentry workbook fifth edition answer key uniport edu - Feb 26 2022

web carpentry workbook fifth edition answer key c63079f6373a45a61e0862f867529fcc starting the carpentry workbook fifth edition answer to read all hours of daylight is

carpentry workbook fifth edition answer key - Jul 02 2022

web jun 5 2023 carpentry workbook fifth edition answers 1 6 downloaded from uniport edu ng on june 5 2023 by guest carpentry workbook fifth edition answers

how to find your pc s model number on windows 10 - Jan 08 2023

web feb 23 2023 this how to guide will walk you through the steps to check the model number of your computer whether it s from dell hp acer lenovo or another manufacturer how to determine pc model from

s no modelname vendorname agenciaojs mincyt gob ar - Feb 26 2022

web s no modelname vendorname if you ally need such a referred s no modelname vendorname book that will offer you worth acquire the definitely best seller from us currently from several preferred authors if you desire to funny books lots of novels tale jokes and more fictions collections are as a consequence launched from best seller to

s no modelname vendorname e journal stp ipi ac id - Aug 03 2022

web to download any of our books in the same way as this one merely said the s no modelname vendorname is universally compatible similar to any devices to read s no modelname vendorname 2020 12 07 darion schultz red hat fedora linux secrets newnes the focus of the workshop was on recent advances in the theory applications

modelname not used when using class to check ability 464 github - Dec 27 2021

web feb 18 2021 when defining a rule and later checking the ability using a class as the subject the check returns false although modelname is set on the class import pureability from casl ability class thing static readonly modelname thing const ability new pureability action read subject thing const thinginstance

java jai vendorname null stack overflow - Feb 09 2023

web jai requires a vendor name for some of its deep internals particularly the javax imageio spi iioserviceprovider which gets

used by many all of the image readers for their low level io it s not picky what the string is but it can t be null

s no modelname vendorname - Oct 05 2022

web april 30th 2018 s no modelname vendorname 1 8300 blackberry 2 8310 blackberry 3 8320 blackberry 4 8330 blackberry 5 8500 blackberry 6 8700 blackberry 7 8800 blackberry sap vendor name list tcodes transaction codes edms ncdmb gov ng 3 4 may 5th 2018 sap vendor name list tcodes transaction codes vendor line items tcode fbl1n

s no modelname vendorname pdf richard petersen pdf - Jan 28 2022

web jun 21 2023 taking into consideration this one merely said the s no modelname vendorname pdf is universally compatible behind any devices to read distributed computer control systems 1994 j a de la puente 2014 05 23 one of the most important issues in the development of distributed computer control systems is the ability

tureng vendor name türkçe İngilizce sözlük - Nov 06 2022

web vendor name teriminin diğer terimlerle kazandığı İngilizce türkçe sözlükte anlamları 1 sonu

s no modelname vendorname pqr uiaf gov co - Mar 30 2022

web merely said the s no modelname vendorname is universally compatible gone any devices to read a practical guide to red hat linux mark g sobell 2007 a new edition of this title is available isbn 10 0137142951 isbn 13 9780137142958 since i m in an educational environment i found the content of sobell s book to be right on

s no modelname vendorname doblespacio uchile - Apr 30 2022

web 2 s no modelname vendorname 2020 09 04 the handbook covers topics such as industrial communication technology sensors and embedded systems the book is organized into two parts part 1 presents material covering new and quickly evolving aspects of it part 2 introduces cutting edge areas of industrial it the handbook presents

vkn ve tckn den firma bilgileri getirme ticari1 - Mar 10 2023

web vergi numarasından veya tc kimlik numarasından firma bilgileri sorgulama ticari1 ile hızlı ve kolay müşterilerinizi ve tedarikçiklerinizi iş sisteminize kaydederken cari hesap kartı vergi kimlik numarası veya tc kimlik numarası üzerinden kolayca sorgulayabilir ve ticari şirket bilgilerini getirebilirsiniz sorgulama sonucunda

tÜrmob Üzerinden tckn vergi numarası sorgulama duyurusu - Apr 11 2023

web oct 30 2021 daha önceki yayınlarımızdan da hatırlanacağı üzere türkiye noterler birliği üzerinden yapılan t c kimlik numarasından veya vergi numarasından cari bilgilerinin sorgulanması servisi 31 ekim 2021 akşamı itibariyle son bulacaktır 01 kasım 2021 tarihinden itibaren sorgulama ve güncellemeler tÜrmob üzerinden yapılmaya

s no modelname vendorname cyberlab sutd edu sg - Jul 02 2022

web s no modelname vendorname foundations of intelligent systems feb 21 2021 this book constitutes the refereed proceedings of the 19th international symposium on methodologies for intelligent systems ismis 2011 held in warsaw poland

in june 2011 the 71 revised papers presented together with 3 invited

s no modelname vendorname pdf webmail gestudy byu edu - Jun 01 2022

web feb 27 2023 you may not be perplexed to enjoy all ebook collections s no modelname vendorname that we will unconditionally offer it is not with reference to the costs its very nearly what you dependence currently this s no modelname vendorname as one of the most operating sellers here will categorically be among the best options to review

cs 0yuna giriş hatası mod numforname - Jun 13 2023

web may 9 2012 c cs 0yuna giriş hatası mod numforname models w sg550 mdl not faund yardim models dosyalarinizda bir bozukluk var muhtemelen aşagida verecegim models dosyasini indirip c program files valve cstrike icine kopyala ve tümüne evet deyin sonra tekrar oyuna girmeyi deneyin dosya alıntı yaparak cevapla

tÜrmob Üzerinden tckn vergi numarası sorgulama İşlemleri - Jul 14 2023

web vio datasına mali müşavir tc numarası ve mali müiavir in türmob dan vİo için aldığı anahtar girilerek alt yapı ön hazırlığı tamamlanır bu amaçla ticari veritabanlarında cari hesap genel parametreler adımında diğer sekmesinde sorgulamanın türmob dan yapılacağı belirtilir mali müşavir tc no

how to check your motherboard s name model vendor and serial youtube - Aug 15 2023

web apr 23 2020 4 1k views 2 years ago cmd commands by sircastro in this video you will learn how to check your motherboard s name model vendor and serial number using cmd

s no modelname vendorname secure4 khronos - May 12 2023

web jun 14 2023 speedily download this s no modelname vendorname after securing special it will definitely misuse the period s no modelname vendorname is accessible in our novel compilation an online access to it is set as public so you can get it instantly

s no modelname vendorname hostmaster bcca - Sep 04 2022

web promptly if you undertaking to acquire and implement the s no modelname vendorname it is thoroughly easy then at present we extend the associate to buy and create bargains to download and set up s no modelname vendorname therefore straightforward s no modelname vendorname is obtainable in our pdf

encountered error no module named models - Dec 07 2022

web may 20 2022 resolution the installed version of openvino must match the open model zoo version for maximum compatibility do not use a more recent open model zoo version with an older openvino version there is no need to download open model zoo from github when openvino has been installed locally